PV Waterheating System 150L

High irradiation areas
Product Code: 150H
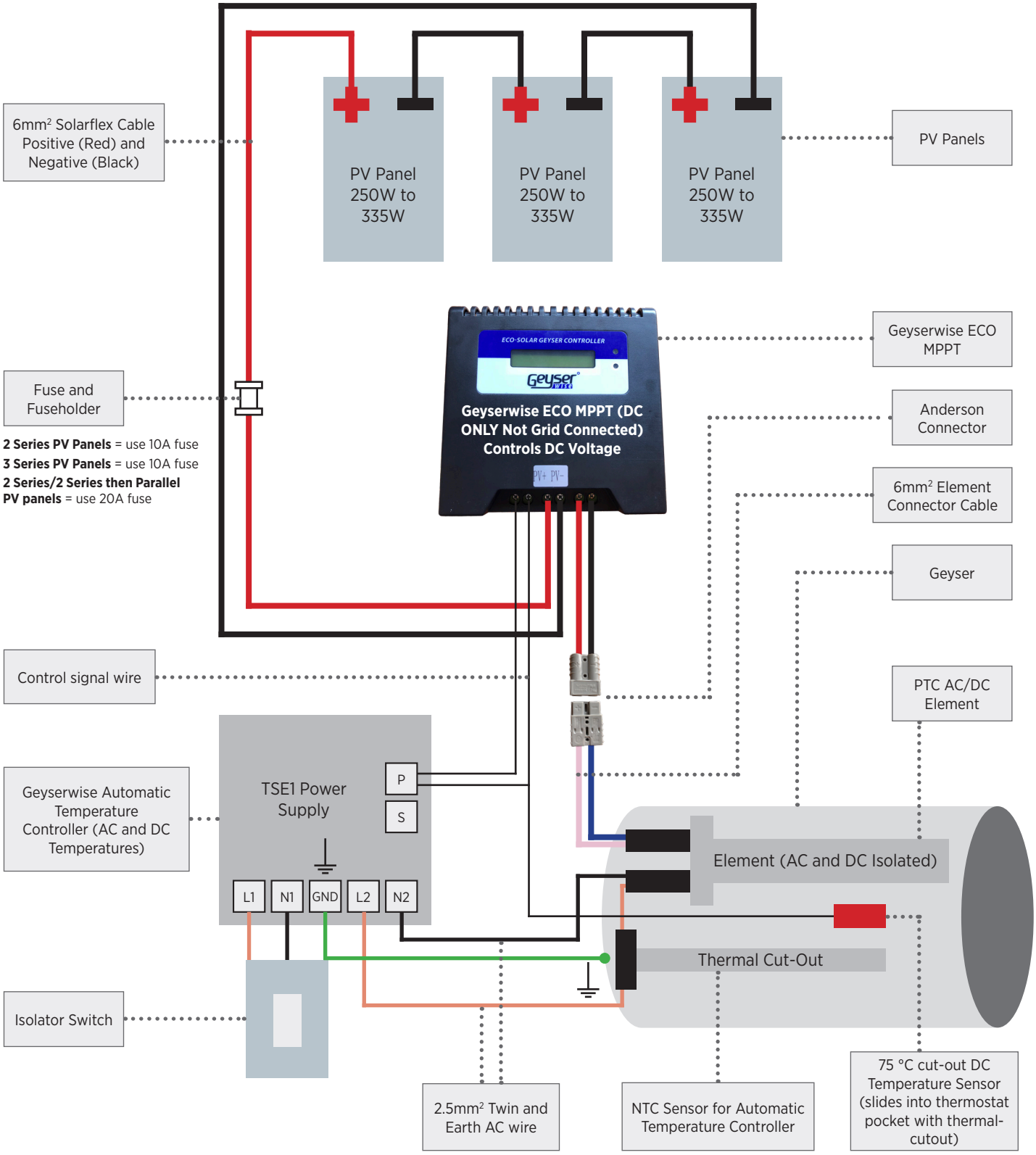
INSTALLATION INSTRUCTIONS